Acme Sanitary Ware Co. Ltd.
1/F, Acme Building, 22-28 Nanking Street, Kowloon, Hong Kong
Tel: 2388 7171 Fax: 2710 8012
Email: acme@acmesanitary.com.hk
Website: www.acmesanitary.com.hk
Since 1949

INAX

PROJECT		REF		REV	ITEM CODE	
LOCATION		DATE			PAGE	

SANITARY WARE SPECIFICATION SHEET

Item Descriptions	Inax (Japan) "AutoSENZ" Deck mounted precise Infra-red sensor mixer with thermostatic variants; 6V DC battery operated up to 7 years battery life; 7 pre-set programs that combine cleaning mode, automatic flushing and thermal disinfection; remote controller in option; durable chrome finish for lasting shine and luster
Dimensions	L166 x W67 x H138 mm
Model	AMV-91K (Mixer) A-11333-VN (Battery Box)
Material / Finish	Plated Nickel / Chromium
Manufacturer	Inax (Japan)
Country of Origin	Vietnam
Source	Acme Sanitary Ware Co. Ltd Mr. Eric Wong/ Mr. Don Yuen
Contact Tel/Fax	(852) 2388-7171 / (852) 2710-8012
E-mail	acme@acmesanitary.com.hk
Website	www.acmesanitary.com.hk

Illustration/ Drawing

DC power supply option

(Not included Battery)

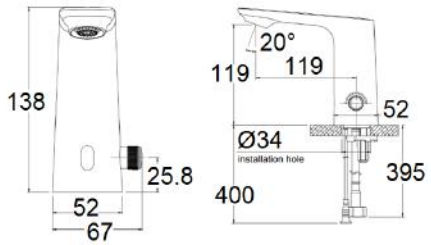

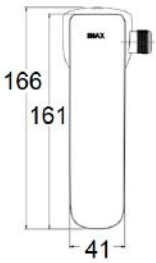

Detail specifications:

- **Not included Lithium Battery and drain pop-up**
- Lithium battery Type : CR-P2
- Power Save: Up to 7 years battery life based on 150/day
- Pre-set Program: Ensure hygiene and easy maintenance with 7 pre-set programs that combine cleaning mode, automatic flushing and thermal disinfection.
- Precise Sensor: Infrared technology ensures accurate sensing
- for hands-free activation
- Remote Controller (sold separately)
- Remote control features an easy-to-read display and effortless operation
- Shine Plus: Durable chrome finish for lasting shine and luster
- The supply water pressure 0.1÷0.5Mpa.
- The water supply pipe 1/2"
- DC power supply: Nominal voltage : 6V
- Reception range 12mm (7-20cm adjutable)
- Automatic safety shut-off : 60s (6-420s adjustable)
- Flow rate: (Inlet cold water temperature 25ºC, Inlet hot water temperature 60ºC, knob at Mixer position)
- ≤ 1.1l/min at 0.1 Mpa
- LEED rating : 2 points (≤1.32l/min at 0.415Mpa)
- Environment Temperature 10ºC ~ 60ºC

Note: For thermostatic variants, cold water pressure shall not be lower than hot water pressure

** All information of the above is for the reference only. No prior notice is made if any changes.*

Acme Sanitary Ware Co. Ltd.
1/F, Acme Building, 22-28 Nanking Street, Kowloon, Hong Kong
Tel: 2388 7171 Fax: 2710 8012
Email: acme@acmesanitary.com.hk
Website: www.acmesanitary.com.hk
Since 1949

INAX

Attention:

- Prevent danger resulting from damaged voltage supply cables. If damaged, the voltage supply cable must be replaced by the manufacturer or his customer service department.
- Only install indoors, in a dry place, avoid direct contact with water and sunshine.
- Use only INAX's genuine replacement parts and accessories.
- The use of other parts will result in the voiding of the warranty and could lead to injuries.

Technical data:

- Switched-mode power supply:
  - In-put : 100-240 VAC, 50-60 Hz
  - Out-put : 6.75 VDC, 2.4W
  - Protection class : IP40
- Lithium battery:
  - Voltage : 6 VDC
  - Type : CR-P2
  - Protection class : IP59K
- IR sensor (default):
  - Reception range : 12cm
  - Run-on time : 1 second
  - Automatic safety shut-off : 60 seconds

Fault	Cause	Remedy
Water not flowing.	• Filter blocked. • Solenoid valve defective. • Plug-in connector without contact. • No voltage. - Battery discharged. (indicator lamp lights up continuously). - Power supply unit defective.	• Clean filter. • Replace solenoid valve. • Check plug-in connector electronics and solenoid valve. - Replace battery. - Replace power supply unit.
Undesired water flow.	• Sensor system detection zone set too high for local conditions. • Automatic flushing activated. • Solenoid valve defective.	• Reduce range using remote control (special accessory). • Wait 1 - 10 minutes. • Replace solenoid valve.
Flow rate too low.	• Aerator dirty. • Filter dirty. • Non-return valve defective.	• Clean or replace aerator. • Clean filter. • Replace the non-return valve.
The outlet water temperature is not as hot/cold as expected.	There is a big deviation between hot and cold inlet water pressure.	Balance pressure of inlet hot and cold water, should not deviate more than 0.5 bar.

Acme Sanitary Ware Co. Ltd.
1/F, Acme Building, 22-28 Nanking Street, Kowloon, Hong Kong
Tel: 2388 7171 Fax: 2710 8012
Email: acme@acmesanitary.com.hk
Website: www.acmesanitary.com.hk
Since 1949

INAX

AMV-91 AMV-91K

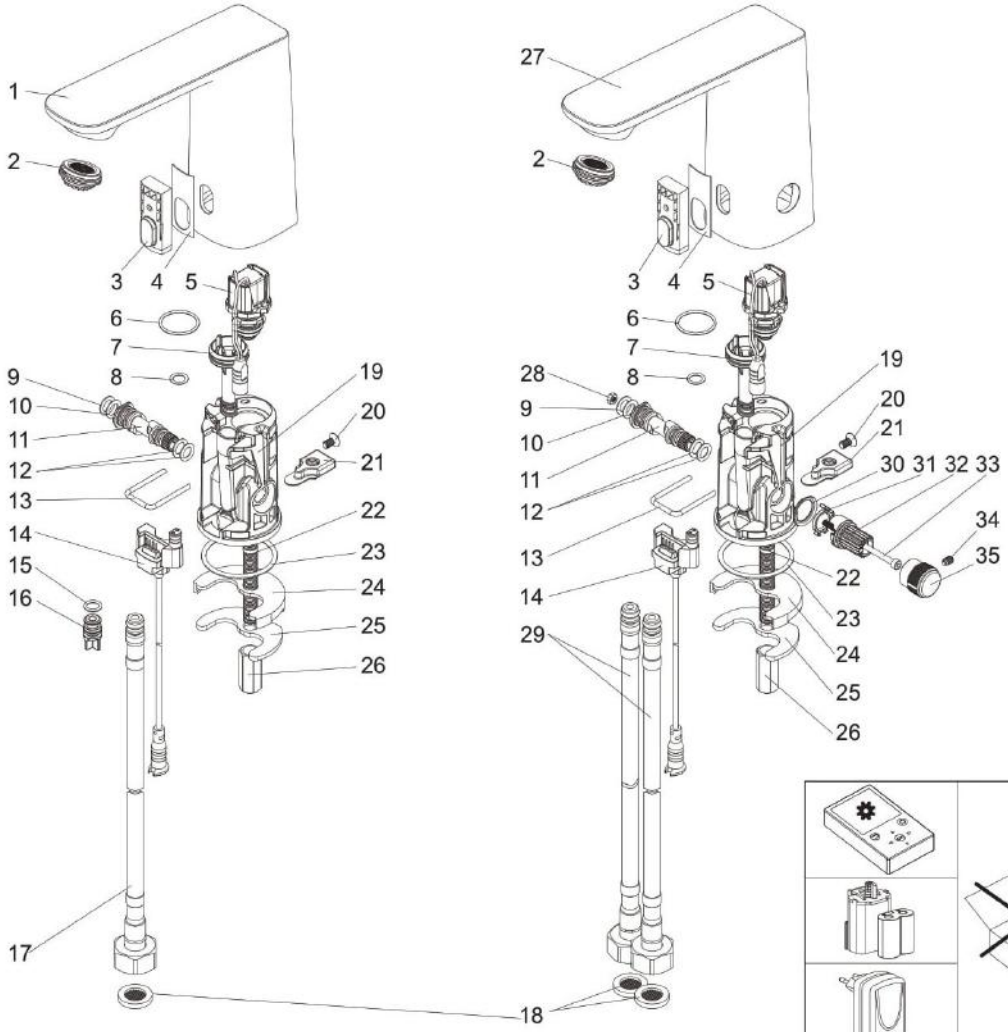

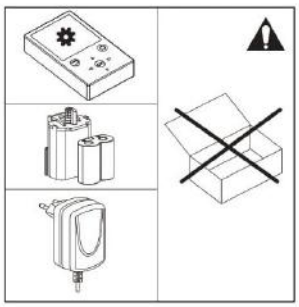

No.	Name	SAP code	AMV-91	AMV-91K
1	Mono body	F00B2626-40	01	—
2	Aerator	M148F8	01	01
3	IR-sensor	M1400D	01	01
4	Self adhesive	M1400E	01	01
5	Solenoid Valve	M148F3	01	01
6	O-ring	M1452K	01	01
7	Tube	M14461	01	01
8	O-ring	M1452L	01	01
9	O-ring	M1452O	01	01
10	O-ring	M1452N	01	01
11	Shaft	M14165	01	01
12	O-ring	M1452M	02	02
13	Clip	M1452R	01	01
14	Plug unit	M148F4	01	01
15	O-ring	M1452J	01	—
16	Drain plug	M1400F	01	—
17	Flexible hose	M148A8	01	—
18	Filter Packing	M14578	01	02
19	Plastic body	M1491B	01	01
20	Bolt	M14462	01	01
21	Holder	M1452Q	01	01
22	Fix bolt	M14378	01	01
23	O-ring	M1452P	01	01
24	Washer	M14575	01	01
25	Packing	M14515	01	01
26	Fix nut	F0371462-21	01	01
27	Mixer body	F00B2625-40	—	01
28	Nut	M14382	—	01
29	Flexible hose	M148G1	—	02
30	Sleeve	M1452S	—	01
31	Adjustment ring	M14727	—	01
32	Adapter	M1400H	—	01
33	Bolt	M14383	—	01
34	Bolt	M14384	—	01
35	Knob	F0611450-40	---	01

Acme Sanitary Ware Co. Ltd.
1/F, Acme Building, 22-28 Nanking Street, Kowloon, Hong Kong
Tel: 2388 7171 Fax: 2710 8012
Email: acme@acmesanitary.com.hk
Website: www.acmesanitary.com.hk

Since 1949

INAX

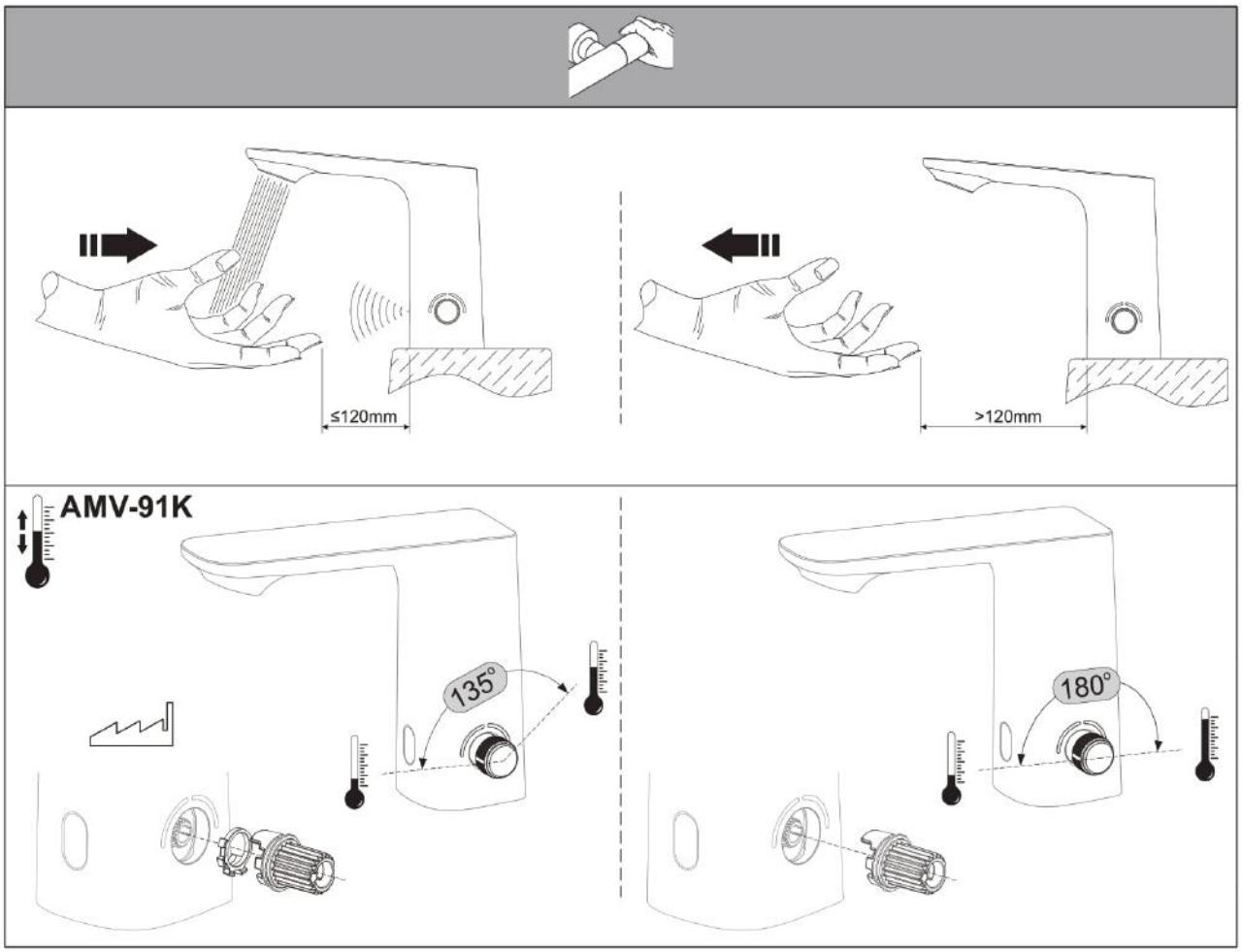

水務署
Water Supplies Department

總部 Headquarters
香港灣仔告士打道七號入境事務大樓 48 樓
igration Tower, 7 Gloucester Road, Wan Chai, Hong Kong

ACME SANITARY WARE CO., LTD. 2388 7171

本署 Our r… : 2… 3321/2023 T/J(4/2023)
來函檔 Your ref.

電話 Tel. :
傳真 Fax. : 2824 0578

1 February 2023

Approval of "INAX" Sensor Mixer
(General Acceptance No. C20230040)

Your letter ref. WRC/2815 dated 3 January 2023 refers.

Having considered the test report ref. 221005PC220138A issued on 6 December 2022 by Fugro Technical Services Limited, this Authority accepts that the fitting described below complies with, and its use when correctly installed does not contravene, the Waterworks Ordinance and Regulations.

Name of Manufacturer:	Branch of Lixil Vietnam Corporation in Quang Nam
Country of Origin:	Vietnam
Brand:	INAX
Details of Fitting:	1/2" Deck mounted sensor basin mixer
Model:	AMV-91K
Body Markings:	**INAX**
Expiry Date:	13 July 2027

caringorganisation

This Authority hereby permits the use of the above fitting in fresh water plumbing systems subject to full adherence to Waterworks installation requirements. In particular, you are required to draw your customers' attention to the following requirement-

> "The cold water supply to the fitting shall be drawn from the same source that supplies the hot water apparatus so as to provide a balanced pressure and to obviate the risk of scalding in the event of a restriction or failure in the water supply."
>
> "A stop cock or gate valve must be installed at the upstream of the fitting for manual isolation of water supply." AND
>
> "The main voltage operated sensor valve should comply with the electricity safety regulation for applications in bathroom, toilet etc."

A condition of this acceptance is that the fitting to be installed shall be replicas of the sample as certified by the testing agent mentioned above and without modifications. This acceptance may be withdrawn at any time if the standard of the fitting installed fails to meet that of the approved sample or if the fitting is found to be unsuitable for use in fresh water plumbing systems.

This acceptance is only applicable to the main body of the fitting, unless otherwise specified.

For the use of the fitting in any project, the General Acceptance Number of this letter must be quoted as a means of identification of acceptance of the fitting by this Authority.

Should you have any enquiries, please contact our Engineer Ms Winnie LO at tel. no. 3583 4086.

Yours faithfully,

(YAU Hau Yin)
for Director of Water Supplies

Encl.

c.c. WSD 3321/1/82] - without catalogue
ME/MC] - with soft copy only